After Recording Return to:
City Manager
City of Frisco
6101 Frisco Square Blvd.
Frisco, Texas 75034

DEVELOPMENT AGREEMENT

(Frisco Independent School District-Eldorado Parkway at Briar Ridge Road)

THIS DEVELOPMENT AGREEMENT (the "Agreement") is entered into by and between the CITY OF FRISCO, TEXAS, a municipal corporation ("Frisco"), and FRISCO INDEPENDENT SCHOOL DISTRICT, a political subdivision of the State of Texas ("Owner").

WHEREAS, Owner owns 17.9579 acres, more or less, situated in the MEP&P RR Survey, Abstract No. 921, Denton County, Texas and adjacent to Briar Ridge Road, as more particularly described in Exhibit A, attached hereto and incorporated herein for all purposes (the "Property"); and

WHEREAS, the Texas Department of Transportation ("TxDOT") has plans to reconstruct Eldorado Parkway (FM 2934) ("Eldorado Parkway"), including without limitation, the construction of six travel lanes and the construction of median openings along Eldorado Parkway (the "Project"); and

WHEREAS, Owner has, in conjunction with the construction of the Project and based on the direct benefit to the Property, requested the construction of an eastbound left turn bay and a westbound right-turn deceleration lane on Eldorado Parkway at the median opening for Briar Ridge Road hereinafter described (hereinafter defined as the "Property Access Improvements"); and

WHEREAS, TxDOT has agreed to construct, as part of its reconstruction of Eldorado Parkway, the Property Access Improvements at the locations hereinafter set forth provided: (a) Owner pays Dannenbaum Engineering to incorporate the Property Access Improvements into TxDOT's plans for Eldorado Parkway; and (b) Owner pays for the construction costs of the Property Access Improvements; and

WHEREAS, as a condition of TxDOT's construction of the Property Access Improvements made the subject of this Agreement, TxDOT requires that Frisco tender the construction costs therefore; and

WHEREAS, in consideration for the construction of the Property Access Improvements at the locations desired by Owner, Frisco requires Owner to place the access improvements construction costs in escrow as hereinafter set forth; and

WHEREAS, Frisco has investigated and determined that it would be advantageous and beneficial to Frisco and its citizens to participate in the construction of the Project as provided herein.

NOW, THEREFORE, in consideration of the covenants and conditions contained in this Agreement, Frisco and Owner agree as follows:

1. Description of Project. The Project consists of the construction of certain improvements to Eldorado Parkway, including without limitation, the location and construction of six travel lanes, median openings, and deceleration lanes along Eldorado Parkway, as more particularly depicted on Exhibit B, attached hereto and incorporated herein for all purposes.

2. Land Subject to Agreement. The land that is the subject of this Agreement is the Property. Owner represents it is the sole owner of the Property.

3. Design of Property Access Improvements. TxDOT requires that all design changes for the Project be made by their design consultant, Dannenbaum Engineering, and that the modified plans be submitted to TxDOT by Frisco. Owner agrees that it will contact and coordinate with Dannenbaum Engineering in order to incorporate the Property Access Improvements into the design for the Project. Owner agrees to pay the fee, if any, for these services directly to Dannenbaum Engineering, separate and apart from this Agreement. Owner agrees to have the modified plans delivered to Frisco and Frisco agrees to submit them to TxDOT.

4. Location of Property Access Improvements. In exchange for the payment of the design and construction costs, TxDOT has agreed to construct the Property Access Improvements: (a) at the locations shown on Exhibit B; and (b) in accordance with TxDOT design and construction standards. The median opening and deceleration lanes located immediately adjacent to a portion of the Property are depicted on Exhibit B (the "Property Access Improvements"), however, the exact location of the Property Access Improvements are subject to change, as solely determined by TxDOT. If the ultimate location(s) of the Property Access Improvements is/are changed, in whole or in part as described herein, resulting in the complete removal of any portion of the Property Access Improvements from the Project, Frisco will return the associated Escrow Funds (hereinafter defined), exclusive of interest earned, if any, to the Owner within thirty (30) days of TxDOT's final decision with regard to the complete removal of the portion of the Property Access Improvements from the Project.

5. Completion of Construction of Access Improvements. Owner acknowledges and agrees that Frisco cannot control the completion of the construction, including without limitation, the timeline therefore, of the Property Access Improvements, and, as such, Owner agrees that Frisco shall in no way be liable for any damages, if any, which may be sustained by the Owner and/or Property, resulting, in whole or in part, directly or indirectly, from TxDOT's failure to complete the construction of the Property Access Improvements by any certain date and/or as set forth in this Agreement.

6. Construction of Project. TxDOT will construct the Project including the Property Access Improvements. Owner has provided Frisco with the estimate of the costs to construct the Property Access Improvements, which amount is anticipated to be Forty One Thousand, Eight Hundred, Thirty ~~Eight~~ Two and 36/1 00 Dollars ($41,832.36), as more particularly described in Exhibit C, attached hereto and incorporated herein for all purposes (the "Property Access Improvements Estimated Construction Costs"). The phrase "construction costs" as used herein

shall mean the actual construction costs, TxDOT engineering and contingency fee, surveying costs, landscape design, geotechnical materials testing and inspection fees associated with the Property Access Improvements. The phrase "cost overruns" as used herein shall mean costs, which may be incurred by TxDOT in the construction of the Property Access Improvements and which are over and above the Property Access Improvements Estimated Construction Costs.

7. Owner's Payment of the Property Access Improvements Estimated Construction Costs. Within fifteen (15) days of its execution of this Agreement, Owner will pay into an escrow account, at the location solely determined by Frisco, funds equal to the Property Access Improvements Estimated Construction Costs (the "Escrow Funds"). The Escrow Funds will be available to Frisco to pay to TxDOT for the construction costs associated with the Property Access Improvements, and Frisco shall, in its sole discretion, be entitled to use, at any time, all or a portion of the Escrow Funds in connection with the construction of the Property Access Improvements. Frisco shall further be entitled to, as its sole property, any and all interest earned on the Escrow Funds, and Owner hereby waives and relinquishes any and all rights or claim to interest earned, if any, on the Escrow Funds. In addition, if any amount of the Escrow Funds remains in the account after TxDOT has issued a final letter of acceptance for the construction of Eldorado Parkway, including but not limited to, the Property Access Improvements, and paid all of the construction costs associated with the Property Access Improvements, as solely determined by Frisco, ("Remaining Escrow Funds"), Owner shall be entitled to, as its sole property, the Remaining Escrow Funds. Frisco may, in its sole discretion, utilize the interest earned on the Escrow Funds, if any, for any purpose. Further, Owner shall, within thirty (30) days of receiving written notice from Frisco, tender to Frisco any and all construction cost overruns associated with the construction of the Property Access Improvements. Notwithstanding anything to the contrary herein, Frisco and Owner agree that Frisco shall, under no circumstance, be responsible for any part or portion of the construction costs associated, directly or indirectly, with the Property Access Improvements.

8. Disclaimer/Waiver of Damages/Liability. (a) Owner acknowledges and agrees that Frisco is not providing any guarantee, representation and/or warranty, and Frisco hereby disclaims any guarantee, representation and/or warranty, of any work performed by TxDOT, its agents, employees, representatives, contractors, subcontractors and/or designees, in connection with the construction of the Property Access Improvements, in whole or in part.

(b) **OWNER HEREBY RELEASES FRISCO, ITS COUNCIL MEMBERS, OFFICERS, AGENTS, REPRESENTATIVES AND EMPLOYEES, FROM AND AGAINST, AND WAIVES ANY AND ALL RIGHTS TO, ANY AND ALL CLAIMS AND/OR DEMANDS FOR DAMAGES (PERSONAL OR PROPERTY), INJURY (INCLUDING DEATH), OR OTHERWISE, IT/THEY MAY HAVE WITH REGARD TO THE CONSTRUCTION AND/OR COMPLETION OF THE PROPERTY ACCESS IMPROVEMENTS AND/OR OR ANY OTHER ACT AND/OR OMISSION RELATING, DIRECTLY OR INDIRECTLY, TO THE PROPERTY ACCESS IMPROVEMENTS, IN WHOLE OR IN PART, AS PROVIDED IN THIS AGREEMENT, EXCEPT TO THE EXTENT ANY SUCH CLAIMS ARISE DUE TO, OR DAMAGES ARE CAUSED BY, SOLELY AND DIRECTLY, THE NEGLIGENCE OR WILLFUL MISCONDUCT OF FRISCO OR ITS AUTHORIZED COUNCIL MEMBERS, OFFICERS, AGENTS, REPRESENTATIVES OR EMPLOYEES. TO THE EXTENT ALLOWABLE BY LAW.**, as a political subdivision to the State of Texas.

RW

9. INDEMNIFICATION. OWNER HEREBY AGREES TO FULLY DEFEND, INDEMNIFY, AND HOLD HARMLESS, FRISCO, ITS COUNCIL MEMBERS, OFFICERS, AGENTS, REPRESENTATIVES AND EMPLOYEES, FROM AND AGAINST ALL DAMAGES, INJURIES (INCLUDING DEATH), CLAIMS, PROPERTY DAMAGES (INCLUDING LOSS OF USE), LOSSES, DEMANDS, SUITS, JUDGMENTS AND COSTS, INCLUDING REASONABLE ATTORNEY'S FEES AND EXPENSES (INCLUDING ATTORNEY'S FEES AND EXPENSES INCURRED IN ENFORCING THIS INDEMNITY), CAUSED BY THE NEGLIGENT, GROSSLY NEGLIGENT, AND/OR INTENTIONAL ACT AND/OR OMISSION OF OWNER, THEIR RESPECTIVE OFFICERS, DIRECTORS, AGENTS, REPRESENTATIVES, EMPLOYEES, CONTRACTORS, SUBCONTRACTORS, LICENSEES, INVITEES AND/OR ANY OTHER THIRD PARTIES FOR WHOM OWNER AND/OR TXDOT IS LEGALLY RESPONSIBLE, IN ITS/THEIR PERFORMANCE OF THIS AGREEMENT AND/OR ARISING OUT OF THE CONSTRUCTION OF THE PROPERTY ACCESS IMPROVEMENTS PURSUANT TO THIS AGREEMENT, (HEREINAFTER "CLAIMS"). IN ITS SOLE DISCRETION, FRISCO SHALL HAVE THE RIGHT TO REASONABLY APPROVE OR SELECT DEFENSE COUNSEL TO BE RETAINED BY OWNER IN FULFILLING ITS OBLIGATION HEREUNDER TO DEFEND AND INDEMNIFY FRISCO, UNLESS SUCH RIGHT IS EXPRESSLY WAIVED BY FRISCO IN WRITING. FRISCO RESERVES THE RIGHT TO PROVIDE A PORTION OR ALL OF ITS OWN DEFENSE; HOWEVER, FRISCO IS UNDER NO OBLIGATION TO DO SO. ANY SUCH ACTION BY FRISCO IS NOT TO BE CONSTRUED AS A WAIVER OF OWNER'S OBLIGATION TO DEFEND FRISCO OR AS A WAIVER OF OWNER'S OBLIGATION TO INDEMNIFY FRISCO PURSUANT TO THIS AGREEMENT. OWNER SHALL RETAIN FRISCO-APPROVED DEFENSE COUNSEL WITHIN SEVEN (7) BUSINESS DAYS OF FRISCO'S WRITTEN NOTICE THAT FRISCO IS INVOKING ITS RIGHT TO INDEMNIFICATION UNDER THIS AGREEMENT. IF OWNER FAILS TO RETAIL COUNSEL WITHIN SUCH TIME PERIOD, FRISCO SHALL HAVE THE RIGHT TO RETAIN DEFENSE COUNSEL ON ITS OWN BEHALF, AND OWNER SHALL BE LIABLE FOR ALL COSTS INCURRED BY FRISCO. THE RIGHTS AND OBLIGATIONS CREATED BY THIS PARAGRAPH SHALL SURVIVE TERMINATION OF THIS AGREEMENT. TO THE EXTENT ALLOWABLE BY LAW, as a political subdivision of the State of Texas.

10. PARTIES' ACKNOWLEDGEMENT OF FRISCO'S COMPLIANCE WITH FEDERAL AND STATE CONSTITUTIONS, STATUTES AND CASE LAW AND FEDERAL, STATE AND LOCAL ORDINANCES, RULES AND REGULATIONS/OWNER'S WAIVER AND RELEASE OF CLAIMS FOR OBLIGATIONS IMPOSED BY THIS AGREEMENT. TO EXTENT ALLOWABLE BY LAW, as a political subdivision to the State of Texas.

(A) OWNER ACKNOWLEDGES AND AGREES THAT:

(I) THE FEES TO BE IMPOSED BY FRISCO REGARDING THE PROPERTY, IN WHOLE OR IN PART, DO NOT CONSTITUTE A:

(A) TAKING UNDER THE TEXAS OR UNITED STATES CONSTITUTION;

(B) VIOLATION OF THE TEXAS WATER CODE, AS IT EXISTS OR MAY BE AMENDED;

(C) NUISANCE; AND/OR

(D) CLAIM FOR DAMAGES AND/OR REIMBURSEMENT AGAINST CITY FOR A VIOLATION OF ANY FEDERAL AND/OR STATE

CONSTITUTION, STATUTE AND/OR CASE LAW AND/OR FEDERAL, STATE AND/OR LOCAL ORDINANCE, RULE AND/OR REGULATION.

(II) THE AMOUNT OF OWNER'S FINANCIAL OR INFRASTRUCTURE CONTRIBUTION (AFTER RECEIVING ALL CONTRACTUAL OFFSETS, CREDITS AND REIMBURSEMENTS, IF ANY) AGREED TO IN THIS AGREEMENT IS ROUGHLY PROPORTIONAL TO THE DEMAND THAT OWNER'S DEVELOPMENT PLACES ON FRISCO'S INFRASTRUCTURE.

(III) OWNER HEREBY AGREES THAT ANY PROPERTY WHICH IT CONVEYS TO FRISCO, IF ANY, PURSUANT TO THIS AGREEMENT IS ROUGHLY PROPORTIONAL TO THE BENEFIT RECEIVED BY OWNER FOR SUCH LAND, AND OWNER HEREBY WAIVES ANY CLAIM THEREFOR THAT IT MAY HAVE. OWNER FURTHER ACKNOWLEDGES AND AGREES THAT ALL PREREQUISITES TO SUCH A DETERMINATION OF ROUGH PROPORTIONALITY HAVE BEEN MET, AND THAT ANY VALUE RECEIVED BY FRISCO RELATIVE TO SAID CONVEYANCE ARE RELATED BOTH IN NATURE AND EXTENT TO THE IMPACT OF THE DEVELOPMENT OF OWNER'S ADJACENT PROPERTY ON FRISCO'S INFRASTRUCTURE. OWNER AND FRISCO FURTHER AGREE TO WAIVE AND RELEASE ALL CLAIMS ONE MAY HAVE AGAINST THE OTHER RELATED TO ANY AND ALL ROUGH PROPORTIONALITY AND INDIVIDUAL DETERMINATION REQUIREMENTS MANDATED BY THE UNITED STATES SUPREME COURT IN *DOLAN V. CITY OF TIGARD*, 512 U.S. 374 (1994), AND ITS PROGENY, AS WELL AS ANY OTHER REQUIREMENTS OF A NEXUS BETWEEN DEVELOPMENT CONDITIONS AND THE PROJECTED IMPACT OF THE PUBLIC INFRASTRUCTURE, to the extent allowed by law.

(IV) OWNER SHALL INDEMNIFY AND HOLD HARMLESS FRISCO FROM ANY CLAIMS AND SUITS OF THIRD PARTIES BROUGHT PURSUANT TO THIS PARAGRAPH, to the extent allowed by law.

(B) OWNER RELEASES CITY FROM ANY AND ALL CLAIMS OR CAUSES OF ACTION BASED ON EXCESSIVE OR ILLEGAL EXACTIONS, ~~to the extent allowed by law~~.

(C) OWNER WAIVES ANY CLAIM FOR DAMAGES AND/OR REIMBURSEMENT AGAINST CITY FOR A VIOLATION OF ANY FEDERAL AND/OR STATE CONSTITUTION, STATUTE AND/OR CASE LAW AND/OR FEDERAL, STATE AND/OR LOCAL ORDINANCE, RULE AND/OR REGULATION, ~~to the extent allowed by law~~.

(D) THIS PARAGRAPH SHALL SURVIVE THE TERMINATION OF THIS AGREEMENT.

11. Limitations of Agreement. The parties hereto acknowledge this Agreement is limited to the Property Access Improvements only. Frisco Ordinances covering property taxes, utility rates and fees, park dedication, perimeter streets, pro rata fees, any and all impact fees and the like are not affected by this Agreement. Further, this Agreement does not waive or limit any

of the obligations of Owner to Frisco under any other ordinance whether now existing or in the future arising.

12. Default. In the event Owner fails to comply with any of the provisions of this Agreement within ten (10) business days after written notice thereof from Frisco, Frisco shall have the following remedies in addition to Frisco's other rights and remedies, at law or in equity:

(a) to refuse to issue any and all building permits for the Property; and/or

(b) to, without notice or any other action of Frisco, immediately revoke any and all building permits issued, and any construction and/or development of the Property shall immediately cease; and/or

(c) to, without notice or any other action of Frisco, immediately revoke any and all certificates of occupancy issued for the Property; and/or

(d) to file this instrument in the Land Records of Denton County as a lien and/or encumbrance against the Owner and/or the Property; and/or

(e) to refuse to accept any portion of any public improvements on the Property and/or associated with the development of the Property; and/or

(f) to refuse to finally accept the Property and/or any portion thereof; and/or

(g) to immediately, without further notice to Owner, cease any and all design and/or construction of the Property Access Improvements; and/or

(h) to seek specific enforcement of this Agreement.

In the event of Frisco's default under this Agreement, Owner will be entitled to seek specific performance and/or any other remedy available to them at law or in equity.

13. Continuity. This Agreement shall be a covenant running with the land and shall be binding upon Owner, its officers, directors, agents, representatives, employees, heirs, representatives, legatees, successors, assigns, grantees and/or trustees. In addition, the parties shall cause this Agreement to be filed in the Land Records of Denton County.

14. Miscellaneous.

(a) Notice. Any notice required to he sent under this Agreement must be in writing and may be served by depositing same in the United States Mail, addressed to the party to be notified, postage pre-paid and registered or certified with return receipt requested, or by delivering the same in person to such party via a hand-delivery service, Federal Express or any courier service that provides a return receipt showing the date of actual delivery of same to the addressee thereof. Notice given in accordance herewith shall be effective upon receipt at the address of the addressee. For purposes of notice, the addresses of the parties shall be as follows:

If to Frisco, to:

City of Frisco
ATTN: George Purefoy, City Manager
6101 Frisco Square Boulevard
Frisco, Texas 75034
(telephone) 972-292-5100
(facsimile) 972-292-5122

If to Owner, to:

Frisco Independent School District
ATTN: Richard Wilkinson
6942 Maple Street
Frisco, Texas 75034
(telephone) 469-633-6000
(facsimile) 469-633-6050

(b) Assignment. This Agreement is not assignable without the prior written consent of Frisco.

(c) Binding Effect. This Agreement shall be binding upon and inure to the benefit of the parties hereto and their respective heirs, executors, administrators, legal representatives, successors and assigns, as allowed.

(d) Entire Agreement. This Agreement contains the entire agreement of the parties with respect to the matters contained herein and may not be modified or terminated except upon the provisions hereof or by the mutual written agreement of the parties hereto.

(e) Venue. This Agreement shall be construed in accordance with the laws of the State of Texas and shall be performable in Collin County, Texas.

(f) Consideration. This Agreement is executed by the parties hereto without coercion or duress and for substantial consideration, the sufficiency of which is forever confessed.

(g) Counterparts. This Agreement may be executed in a number of identical counterparts, each of which shall be deemed an original for all purposes. A facsimile signature will also be deemed to constitute an original if properly executed.

(h) Authority to Execute. The individuals executing this Agreement on behalf of the respective parties below represent to each other and to others that all appropriate and necessary action has been taken to authorize the individual who is executing this Agreement to do so for and on behalf of the party for which his or her signature appears, that there are no other parties or entities required to execute this Agreement in order for the same to be an authorized and binding agreement on the party for whom the individual is signing this Agreement and that each individual affixing his or her signature hereto is authorized to do so, and such authorization is valid and effective on the date hereof.

(i) Savings/Severability. In case any one or more of the provisions contained in this Agreement shall for any reason be held to be invalid, illegal or unenforceable in any respect, such invalidity, illegality or unenforceability shall not affect any other provision thereof, and this Agreement shall be construed as if such invalid, illegal or unenforceable provision had never been contained herein.

(j) Representations. Each signatory represents this Agreement has been read by the party for which this Agreement is executed and that such party has had an opportunity to confer with its counsel.

(k) Miscellaneous Drafting Provisions. This Agreement shall be deemed drafted equally by all parties hereto. The language of all parts of this Agreement shall be construed as a whole according to its fair meaning, and any presumption or principle that the language herein is to be construed against any party shall not apply. Headings in this Agreement are for the convenience of the parties and are not intended to be used in construing this document.

(l) Sovereign Immunity. The parties agree that Frisco has not waived its sovereign immunity by entering into and performing its obligations under this Agreement.

(m) No Third Party Beneficiaries. Nothing in this Agreement shall be construed to create any right in any third party not a signatory to this Agreement, and the parties do not intend to create any third party beneficiaries by entering into this Agreement.

(n) Vested Rights/Chapter 245 Waiver. The signatories hereto shall be subject to all ordinances of Frisco, whether now existing or in the future arising. This Agreement shall confer no vested rights on the Property unless specifically enumerated herein. In addition, nothing contained in this Agreement shall constitute a "permit" as defined in Chapter 245, Texas Local Government Code and nothing in this Agreement provides Frisco with fair notice of any project of the Owner. **OWNER WAIVES ANY STATUTORY CLAIM UNDER CHAPTER 245 OF THE TEXAS LOCAL GOVERNMENT. THIS PARAGRAPH SHALL SURVIVE THE TERMINATION OF THIS AGREEMENT.**

(o) Attorneys' Fees. In any legal proceeding brought to enforce the terms of this Agreement, the prevailing party may recover its reasonable and necessary attorneys' fees from the non-prevailing party as permitted by Section 271.159 of the Texas Local Government Code, as it exists or may be amended.

(p) Incorporation of Recitals. The representations, covenants and recitations set forth in the foregoing recitals of this Agreement are true and correct and are hereby incorporated into the body of this Agreement and adopted as findings of Frisco and the Owner and/or its authorized representatives.

(q) Owner's Warranties/Representations. All warranties, representations and covenants made by Owner in this Agreement or in any certificate or other instrument delivered by Owner to Frisco under this Agreement shall be considered to have been relied upon by Frisco and will survive the satisfaction of any fees and/or payments made under this Agreement, regardless of any investigation made by Frisco or on Frisco' s behalf.

(r) References to Owner. "Owner" as used herein shall mean Owner, its officers, directors, agents, representatives, employees, heirs, representatives, legatees, successors, assigns, grantees, contractors, subcontractors, invitees, licensees, trustees and/or any other third party for whom Owner is legally responsible.

(s) Indemnification. The parties agree that the Indemnity provisions set forth in Paragraphs 8 and 9 herein are conspicuous, and the parties have read and understood the same.To the extent allowable by law.

(t) Waiver. Waiver by either party of any breach of this Agreement, or the failure of either party to enforce any of the provisions of this Agreement, at any tune, shall not in any way affect, limit or waive such party's right thereafter to enforce and compel strict compliance.

IN WITNESS WHEREOF, the parties have executed this Agreement and caused this Agreement to be effective on the latest date as reflected by the signatures below.

CITY OF FRISCO, TEXAS

By:_____
George Purefoy, City Manager

Date:_____

FRISCO INDEPENDENT SCHOOL DISTRICT, a political subdivision of the State of Texas

By: Richard Wilkinson
Richard Wilkinson, Assistant Superintendent of Facilities & Finance

Date: 10/3/08

STATE OF TEXAS *
*
COUNTY OF COLLIN *

BEFORE ME, the undersigned authority, on this day personally appeared George Purefoy, known to me to be one of the persons whose names are subscribed to the foregoing instrument; he acknowledged to me he is the duly authorized representative for the **CITY OF FRISCO, TEXAS**, and he executed said instrument for the purposes and consideration therein expressed.

GIVEN UNDER MY HAND AND SEAL OF OFFICE this _____ day of _____, 2008.

_____
Notary Public in and for the State of Texas
My Commission Expires:_____

STATE OF TEXAS *
*
COUNTY OF DALLAS *

BEFORE ME, the undersigned authority, on this day personally appeared Richard Wilkinson, Assistant Superintentant of **FRISCO INDEPENDENT SCHOOL DISTRICT**, a political subdivision of the State of Texas, known to me to be one of the persons whose names are subscribed to the foregoing instrument, and who acknowledged to me that he executed the same for the purposes and consideration therein expressed and in the capacity therein stated on behalf of said company and partnership.

GIVEN UNDER MY HAND AND SEAL OF OFFICE this 6 day of October, 2008.

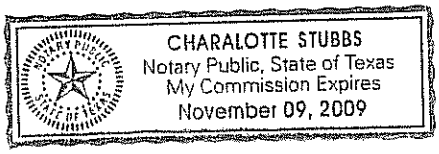

Charalotte Stubbs
Notary Public in and for the State of Texas
My Commission Expires: 11-9-09

EXHIBIT A
(DESCRIPTION OF THE PROPERTY)

[2 pages attached]

FIELD NOTE DESCRIPTION DEVELOPERS TRACT

STATE OF TEXAS COUNTY OF DENTON

LEGAL DESCRIPTION
17.9579 ACRES

BEING a tract of land out of the MEP&P RR SURVEY, Abstract No. 921 in the City of Frisco, Denton County, Texas being part of the 19.3708 acre tract of land described in deed to Frisco Independent School District recorded in Denton County Clerk's File No. 2006-34212 of the Real Property Records of Denton County, Texas and being more particularly described as follows:

BEGINNING at a 5/8" iron rod set with a plastic cap stamped "KHA" (hereinafter called 5/8" iron rod set) for the southeast corner of Knolls of Frisco, Phase 1, an addition to the City of Frisco according to the plat thereof recorded in Cabinet X, Page 953 of the Plat Records of Denton County, Texas;

THENCE with the east line of said Knolls of Frisco and with the east line of a tract of land described in deed to Centex Homes recorded in Denton County Clerk's File No. 05-37867 of the Real Property Records of Denton County, Texas, North 00°15'28" West, passing a fence post at 0.5 feet, in all a total distance of 1167.38 feet to a 5/8" iron rod set for corner in the south right-of-way line of Newman Boulevard (60' ROW at this point);

THENCE leaving said east line, and with said south right-of-way line, the following courses and distances to wit:

North 89°44'34" East, a distance of 650.13 feet to a 5/8" iron rod found for the beginning of a tangent curve to the left with a radius of 355.00 feet, a central angle of 23°26'58", and a chord bearing and distance of North 78°01'05" East, 144.28 feet;

Northeasterly, with said curve, an arc distance of 145.29 feet to a 5/8" iron rod found for the beginning of a curve to the right with a radius of 250.00 feet, a central angle of 0°23'43", and a chord bearing and distance of North 66°29'28" East, 1.73 feet;

Northeasterly, with said curve, an arc distance of 1.73 feet to a 5/8" iron rod found for corner;

North 89°44'34" East, a distance of 40.69 feet to a 5/8" iron rod found for corner at the intersection of the south right-of-way line of said Newman Boulevard and the west right-of-way line of Briar Ridge Road;

THENCE with said west right-of-way line, the following courses and distances to wit:

South 51°55'35" East, a distance of 14.86 feet to a 5/8" iron rod found for corner;

South 00°14'03" East, a distance of 257.73 feet to a 5/8" iron rod found for the beginning of a non-tangent curve to the right having a radius of 420.00 feet, a central angle of 45°38'30", a chord bearing and distance of South 22°35'10" West, 325.79 feet;

Southwesterly, with said curve, an arc distance 334.57 feet to a 5/8" iron rod found for corner;

South 45°24'25" West, a distance of 115.37 feet to a 5/8" iron rod found for the beginning of a tangent curve to the left with a radius of 480.00 feet, a central angle of 39°24'10", and a chord bearing and distance of South 25°42'20" West, 323.63 feet;

Southwesterly, with said curve, an arc distance of 330.10 feet to a 5/8" iron rod found for corner;

South 06°00'15" West, a distance of 143.67 feet to a 5/8" iron rod found for the beginning of a tangent curve to the left with a radius of 480.00 feet, a central angle of

13°28'57", and a chord bearing and distance of South 00°44'14" East, 112.69 feet; Southeasterly, with said curve, an arc distance of 112.95 feet to a 5/8" iron rod found for corner;

THENCE leaving the west right-of-way line of said Briar Ridge Road, South 89°22'30" West, a distance of 479.83 feet to the **POINT OF BEGINNING** and containing 17.9579 acres of land.

Bearing system based on the Texas State Plane Coordinate (North Central Zone) as determined by the City of Frisco Monuments and the monuments found in the west right-of-way line of Briar Ridge Road according to the plat recorded in Cabinet Y, Page 623 of the Plat Records of Denton County, Texas.

EXHIBIT B
(DESCRIPTION OF PROJECT/
DEPICTION OF PROPERTY ACCESS IMPROVEMENTS)

[2 pages attached]

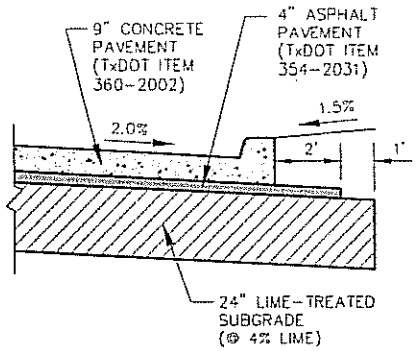

TYPICAL PAVEMENT SECTION
NTS

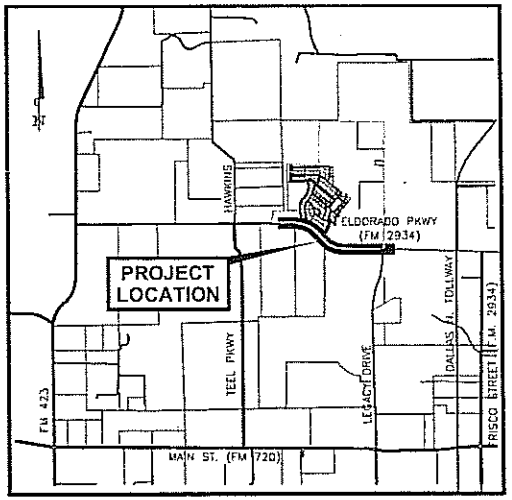

VICINITY MAP
NTS

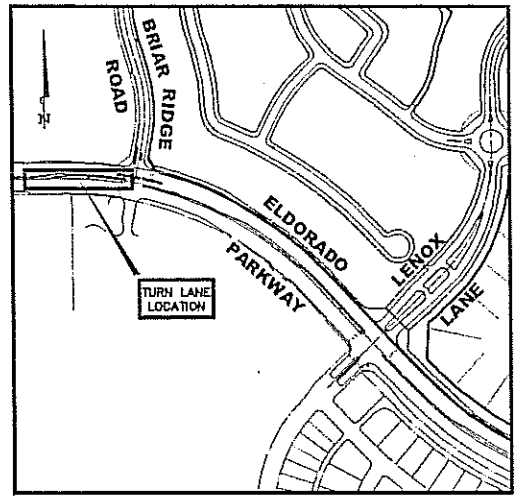

LOCATION MAP
NTS

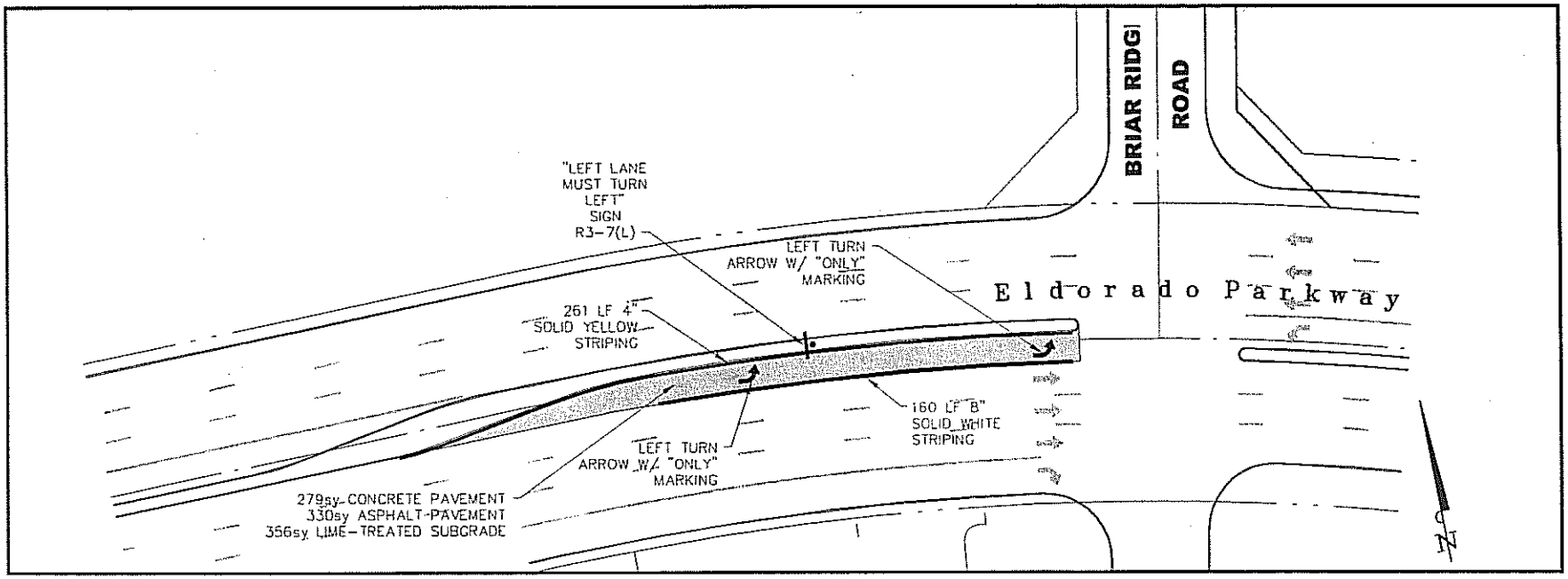

LEFT TURN LANE IMPROVEMENTS FOR ELDORADO PARKWAY AT BRIAR RIDGE ROAD

FRISCO, TEXAS

0 30 60
1" = 60'

Kimley-Horn and Associates, Inc.

SHEET 2 OF 3

File: G:\67293001 - Darling-Newman Village\PHASE 1\Exhibits\City of Frisco - ESCROW EXHIBITS\Briar Ridge Rd.-Left Turn Lane Exhibit.dwg [Layout1] 6/1/2007
Xrefs: XB511-HORZ x-base-Escrow X-Paving NV-Phi Escrow X-Eldorado Parkway-Escrow X-Frisco Fire Station No. 6 x-site-school Images:

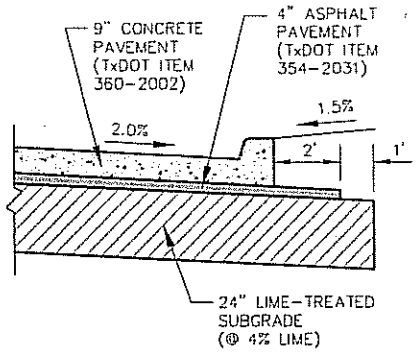

TYPICAL PAVEMENT SECTION
NTS

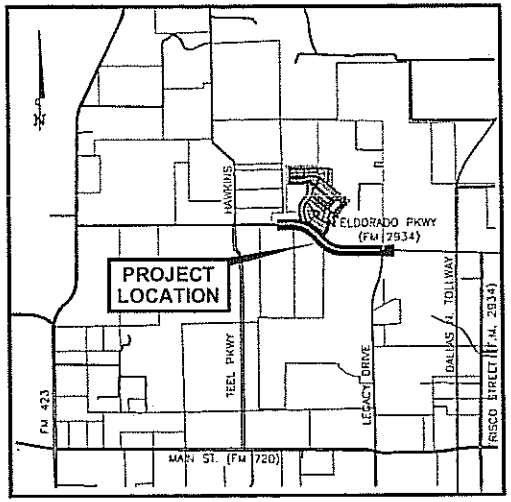

VICINITY MAP
NTS

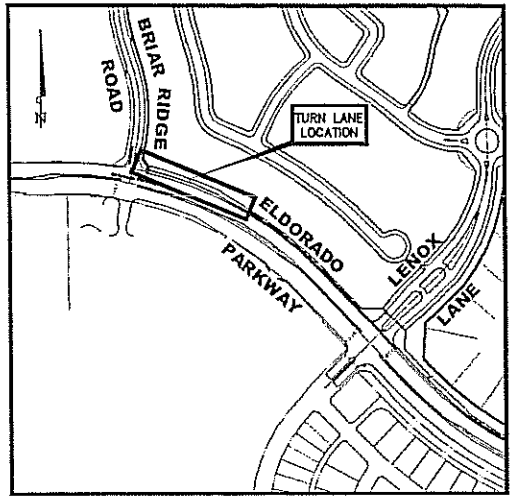

LOCATION MAP
NTS

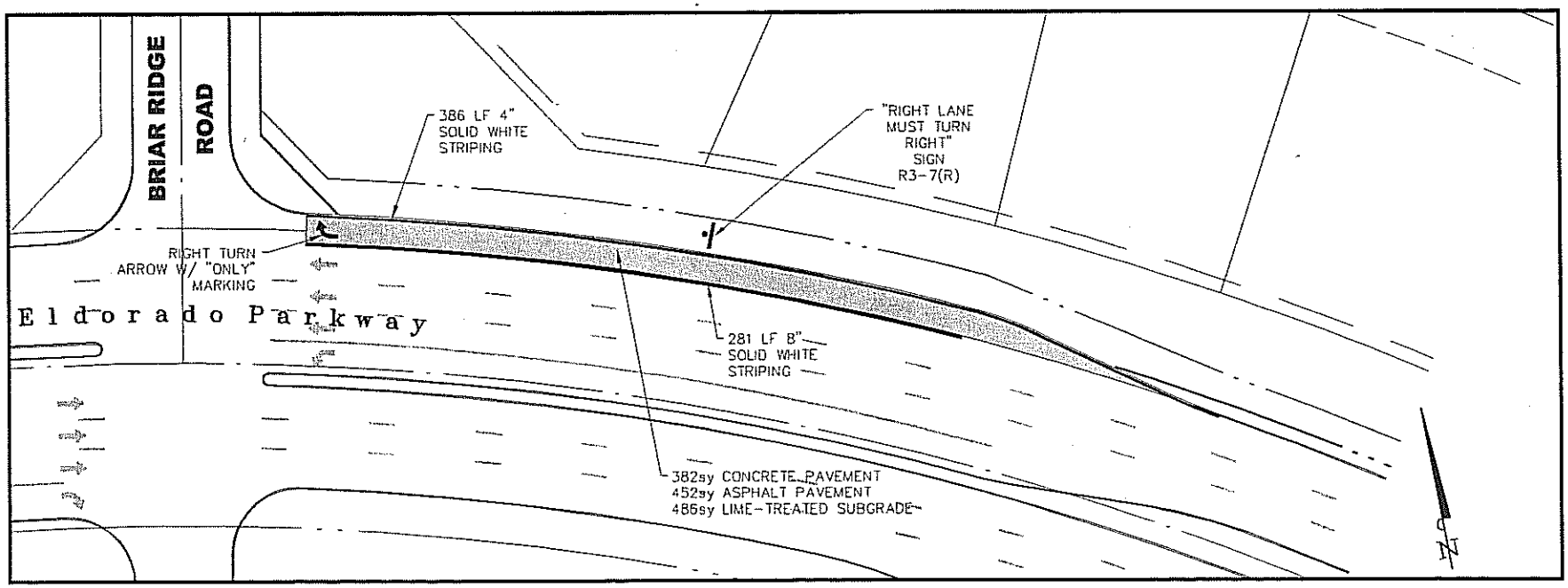

DECELERATION LANE IMPROVEMENTS FOR ELDORADO PARKWAY AT BRIAR RIDGE ROAD

FRISCO, TEXAS

0 30 60
1" = 60'

Kimley-Horn and Associates, Inc.

SHEET 3 OF 3

File: G:\67293001 - Darling-Newman Village\PHASE 1\Exhibits\City of Frisco - ESCROW EXHIBITS\Brior Ridge Rd.-Right Turn Lane Exhibit.dwg [Layout1] 6/1/20
Xrefs: X8511-HORZ x-base-Escrow X-Paving NV-Phi Escrow X-Eldorado Parkway-Escrow X-Frisco Fire Station No. 6 x-site-school Images:

EXHIBIT C
(Description of Property Access Improvements
Estimated Construction Costs)

[solo page attached]

BRIAR RIDGE ROAD TxDOT ESCROW AMOUNT

Project:	Eldorado Left Turn & Deceleration Lanes @ Briar Ridge Road City of Frisco, Denton County, Texas	**Acreage:**	N/A
		Lots:	0
Client:	Frisco Independent School District	**Job Number:**	67293004
Prepared By:	Kimley-Horn and Associates, Inc. 5750 Genesis Court, Suite 200 Frisco, Texas 75034	**File:**	Turn Lane qto 2007-05-25
		Date:	5/25/07

PAVING - LEFT TURN LANE

DESCRIPTION	TxDOT ITEM	QUANTITY	UNIT	COST / UNIT	TOTAL COST
9" Concrete Pavement	360-2002	279	S.Y.	$ 33.39	$9,326.94
4" Asphalt Pavement	354-2031	330	S.Y.	$ 5.00	$1,650.61
24" Lime Treated Subgrade	260-2026	356	S.Y.	$ 11.00	$3,910.67
Lime (24" @ 4%)	260-2002	12.8	TON	$ 130.51	$1,670.34
Reflective Left Turn Arrow	666-2053	2	EA.	$ 50.00	$100.00
Reflective "ONLY" Pavement Wording	666-2095	2	EA.	$ 75.00	$150.00
"Left Lane Must Turn Left" Sign (R3-7L)	644-2001	1	EA.	$ 503.62	$503.62
4" Solid Yellow Turn Lane Striping	666-2011	261	L.F.	$ 0.18	$46.98
8" Solid White Turn Lane Striping	666-2026	160	L.F.	$ 2.55	$408.00
				Total	$17,767.15

PAVING - DECELERATION LANE

DESCRIPTION	TxDOT ITEM	QUANTITY	UNIT	COST / UNIT	TOTAL COST
9" Concrete Pavement	360-2002	382	S.Y.	$ 33.39	$12,758.69
4" Asphalt Pavement	354-2031	452	S.Y.	$ 5.00	$2,257.93
24" Lime Treated Subgrade	260-2026	486	S.Y.	$ 11.00	$5,349.56
Lime (24" @ 4%)	260-2002	17.5	TON	$ 130.51	$2,284.92
Reflective Right Turn Arrow	666-2053	1	EA.	$ 50.00	$50.00
Reflective "ONLY" Wording	666-2095	1	EA.	$ 75.00	$75.00
"Right Lane Must Turn Right" Sign (R3-7R)	644-2001	1	EA.	$ 503.62	$503.62
4" Solid White Turn Lane Striping	666-2011	383	L.F.	$ 0.18	$68.94
8" Solid White Turn Lane Striping	666-2026	281	L.F.	$ 2.55	$716.55
				Total	$24,065.21

BRIAR RIDGE ROAD ESCROW TOTAL	$41,832.36